CE Radio Test Report

Equipment	:	RouterBOARD LHG G-60ad
Brand Name	:	RouterBOARD
Model No.	:	RBLHGG-60ad
Standard	:	EN 302 217-2 V3.1.1 (2017-05)
Frequency Range	:	57 GHz – 66 GHz
Applicant	:	Mikrotikls SIA Brivibas gatve 214i, Riga, LV-1039 LATVIA
Manufacturer	:	Mikrotikls SIA Brivibas gatve 214i, Riga, LV-1039 LATVIA

The product sample received on Oct. 30, 2017 and completely tested on Jan. 10, 2018. We, SPORTON, would like to declare that the tested sample has been evaluated in accordance with the procedures given in EN 301 126-1 v1.1.2 and shown compliance with the applicable technical standards.

The test results in this report apply exclusively to the tested model / sample. Without written approval of SPORTON INTERNATIONAL INC., the test report shall not be reproduced except in full.

Cliff Chang
SPORTON INTERNATIONAL INC.

TABLE OF CONTENTS

SUMMARY OF TEST RESULT 3

1 GENERAL DESCRIPTION 5

1.2 Accessories 7
1.3 Support Equipment.....7
1.4 Testing Applied Standards 7
1.5 Testing Location Information 7

2 TEST CONFIGURATION OF EQUIPMENT UNDER TEST 8

2.1 Test Channel Frequencies Configuration.....8
2.2 The Worst Case Power Setting Parameter 8
2.3 EUT Operation during Test 8
2.4 Conformance Tests and Related Test Frequencies 8
2.5 Test Setup Diagram 9

3 TRANSMITTER TEST RESULT 10

3.1 Maximum Power, EIRP and Power Tolerance.....10
3.2 Radio Frequency Spectrum Mask.....13
3.3 Transmitter Spurious Emissions.....18
3.4 Transmitter Frequency Tolerance 29

4 RECEIVER TEST RESULT 31

4.1 Receiver Spurious Emissions.....31
4.2 Minimum RSL.....42
4.3 Co-channel Interference.....45
4.4 Adjacent Channel Interference Sensitivity 47
4.5 Second Adjacent Channel Interference Sensitivity 48
4.6 CW Interference 49

5 LIST OF MEASURING EQUIPMENTS.....51

6 MEASUREMENT UNCERTAINTY 53

APPENDIX A. TEST PHOTOS……..……A1 ~ A2

PHOTOGRAPHS OF EUT V01

SUMMARY OF TEST RESULT

Essential Transmitter Test Suites				
Report Clause	EN Std. Clause	Description	Result	Remark
3.1	4.2.1.1	Maximum power and EIRP	Pass	-
3.1	4.2.1.2	Combined TX power output and EIRP limits	Pass	-
3.1	4.2.1.3	Output power tolerance	Pass	-
-	4.2.2.1.1	Automatic Transmit Power Control (ATPC)	N/A	w/o ATPC
-	4.2.2.1.2	Remote Transmit Power Control (RTPC)	N/A	w/o RTPC
-	4.2.2.2	Remote Frequency Control (RFC)	N/A	w/o RFC
3.2	4.2.3	Radio frequency spectrum mask	Pass	-
-	4.2.4	Discrete CW components exceeding the spectrum mask	N/A	w/o Discrete CW
3.3	4.2.5	Transmitter Spurious Emissions	Pass	-
-	4.2.7	Dynamic change of modulation order (Mixed-Mode)	N/A	w/o Mixed-Mode
3.4	4.2.8	Radio frequency tolerance	Pass	-

Essential Receiver Test Suites				
Report Clause	EN Std. Clause	Description	Result	Remark
4.1	4.3.1	Receiver Spurious Emissions	Pass	-
4.2	4.3.2	Minimum RSL	Pass	-
4.3	4.3.3.2.2	Co-channel interference	Pass	-
4.4	4.3.3.2.2	Adjacent channel interference sensitivity	Pass	-
4.5	4.3.3.2.3	Second adjacent channel interference sensitivity	Pass	-
4.6	4.3.4	CW Spurious interference	Pass	-

REVISION HISTORY

REPORT NO.	VERSION	DESCRIPTION	ISSUED DATE
ER760928	Rev. 01	Initial issue of report	Feb. 12, 2018

1 General Description

1.1.1 RF General Information

RF General Information	
Frequency Range	57-66 GHz
The Channel Plan(s)	Channel 1: 58.32 GHz Channel 2: 60.48 GHz Channel 3: 62.64 GHz
Modulation	$\pi/2-BPSK, \pi/2-QPSK, \pi/2-16QAM$
EN 302 217-2 Annex H refers to systems based on CS = n × 50 MHz, with 1 ≤ n ≤ 40; systems not designed according that CS granularity should refer to the closest CS closest to their occupied bandwidth.	

1.1.2 Antenna Information

Ant.	Brand	Model Name	Antenna Type	Connector	Gain (dBi)
1	Mikrotik	60G-phased-array	Parabolic Dish Antenna	Soldered	42

1.1.3 EUT Operational Condition

EUT Power Type	From PoE		
Operational Voltage	☒ Vnom (48 V)	☒ Vmax (52.8 V)	☒ Vmin (43.2 V)
Operational Temperature	☒ Tnom (20°C)	☒ Tmax (70°C)	☒ Tmin (-40°C)

1.1.4 Equipment Spectral Efficiency Class

Equipment Spectral Efficiency Class
☒ Equipment Spectral Efficiency Class 1
☒ Equipment Spectral Efficiency Class 2
☒ Equipment Spectral Efficiency Class 3
☒ Equipment Spectral Efficiency Class 4L
☐ Equipment Spectral Efficiency Class 4H
☐ Equipment Spectral Efficiency Class 5L
☐ Equipment Spectral Efficiency Class 5H
☐ Equipment Spectral Efficiency Class 6L
☐ Equipment Spectral Efficiency Class 6H
☐ Equipment Spectral Efficiency Class 7
☐ Equipment Spectral Efficiency Class 8

1.1.5 Duty Cycle

Duty Cycle		
The transmitter is intended for:	☒	Continuous Duty: 100 %
	☐	Intermittent Duty: … %
	☐	Continuous operation possible for testing purposes

1.1.6 Output power tolerance

Output power tolerance
The supplier declares output power tolerance is 42 dB, it shall be included in the limits in clauses 3.1.1 and 3.2.1.

1.2 Accessories

Accessories				
No.	**Equipment Name**	**Brand Name**	**Model Name**	**Rating**
1	Adapter	MLF	MLF-A00122400380FE0141	Input: 100-240V ~ 50/60Hz, 0.4Amax Output: 24V, 0.38A
2	PoE	MikroTik	RBGPOE	Input: 9-48V
Others				
Standing dock (Round type)*1 Standing dock (Long type)*2				

1.3 Support Equipment

For Temp. and Humidity Chamber test:

Support Equipment				
No.	**Equipment**	**Brand Name**	**Model Name**	**FCC ID**
1	Notebook	lenovo	80J2	DoC

For others test:

Support Equipment				
No.	**Equipment**	**Brand Name**	**Model Name**	**FCC ID**
1	Notebook	DELL	E4300	DoC
2	Notebook	lenovo	80J2	DoC
3	Device	RouterBOARD	RBLHGG-60ad	TV7LHGG60AD

1.4 Testing Applied Standards

According to the specifications of the manufacturer, the EUT must comply with the requirements of the following standards:

- EN 302 217-2 V3.1.1 (2017-05)

1.5 Testing Location Information

Testing Location						
☐	HWA YA	ADD : No. 52, Hwa Ya 1st Rd., Kwei-Shan Hsiang, Tao Yuan Hsien, Taiwan, R.O.C. TEL : 886-3-327-3456 FAX : 886-3-327-0973				
☒	JHUBEI	ADD : No.8, Lane 724, Bo-ai St., Jhubei City, HsinChu County 302, Taiwan, R.O.C. TEL : 886-3-656-9065 FAX : 886-3-656-9085				
Test Condition		**Test Site No.**	**Test Engineer**	**Test Environment**	**Test Date**	
RF Conducted		TH01-CB	Justin Lin	22°C / 54%	Jan. 10, 2018	
Radiated Emission		05CH01-CB	Justin Lin	22°C / 54%	Jan. 10, 2018	

2 Test Configuration of Equipment under Test

2.1 Test Channel Frequencies Configuration

Test Channel Frequencies Configuration	
Channel 1 (GHz)	58.32
Channel 2 (GHz)	60.48
Channel 3 (GHz)	62.64

2.2 The Worst Case Power Setting Parameter

The Worst Case Power Setting Parameter			
Test Software Version	QCRT		
Test Frequency (GHz)	**Channel 1**	**Channel 2**	**Channel 3**
	58.32	60.48	62.64
Power Setting Parameter	Default	Default	Default

2.3 EUT Operation during Test

During the test, “QCRT " under WIN 7 was executed the test program to control the EUT continuously transmit/receive RF signal.

2.4 Conformance Tests and Related Test Frequencies

Test Item	Test Frequencies (GHz)
Maximum power	58.32,60.48, 62.64
Equivalent isotropically radiated power (EIRP) and Output power tolerance	58.32,60.48, 62.64
Radio frequency spectrum mask	58.32,60.48, 62.64
Transmitter Spurious emissions	58.32,60.48, 62.64
Radio frequency tolerance	58.32,60.48, 62.64
Receiver Spurious emissions	58.32,60.48, 62.64
Minimum RSL	58.32,60.48, 62.64
Co-channel interference	60.48
Adjacent channel interference sensitivity	60.48
Second adjacent channel interference sensitivity	60.48
CW Spurious interference	60.48

Note: The EUT can only be used at standing position.

2.5 Test Setup Diagram

Test Setup Diagram - Radiated Test

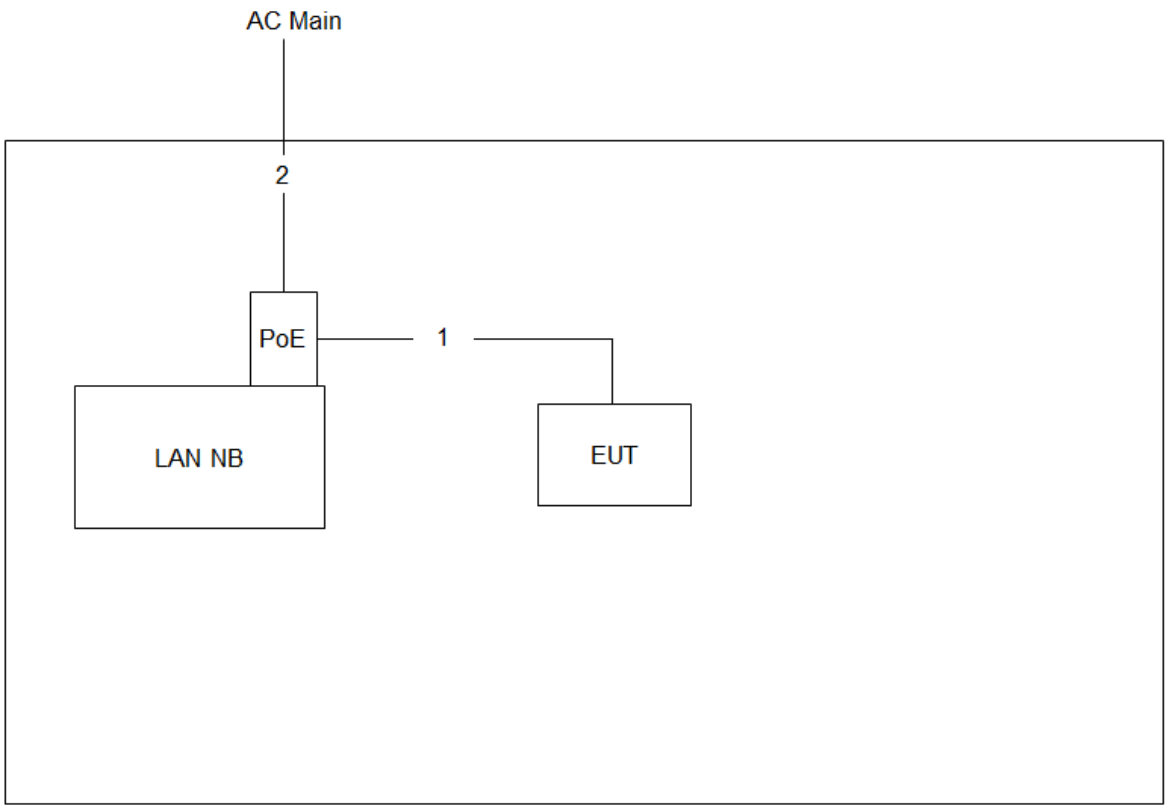

Item	Connection	Shielded	Length
1	RJ-45 cable	No	1.5m
2	Power cable	No	1.5m

3 Transmitter Test Result

3.1 Maximum Power, EIRP and Power Tolerance

3.1.1 Limit

w/o ATPC Option	
EIRP Limit (dBm) w/o ATPC	52
Pout Limit (dBm) w/o ATPC	10
EIRP PSD Limit (dBm/MHz) w/o ATPC	32
Min Gant Limit (dBi)	30
Transmitter Power Tolerance	±3dB

ATPC Option	
EIRP Limit (dBm) w/o ATPC	52
Pout Limit (dBm) w/o ATPC	10
EIRP PSD Limit (dBm/MHz) w/o ATPC	32
Min Gant Limit (dBi)	30
Transmitter Power Tolerance	±3dB

3.1.2 Measuring Instruments

See list of measuring instruments of this test report.

3.1.3 Test Procedures

Method of measurement: see EN 301 126-1 v1.1.2 clause 5.2.1.

3.1.4 Test Setup

Maximum Power, EIRP and Power Tolerance

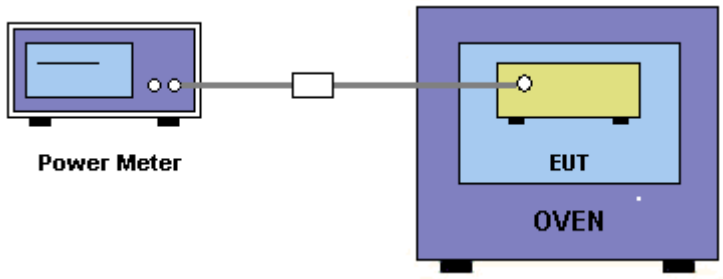

3.1.5 Test Result of Maximum Power

Test Frequency (GHz)	Test Conditions	EIRP (dBm)	Antenna Gain (dBi)	Pout (dBm)	Limit (dBm)
58.32	NTNV	45.33	42.00	3.33	10
	HTHV	44.05	42.00	2.05	10
	HTLV	44.03	42.00	2.03	10
	LTHV	49.79	42.00	7.79	10
	LTLV	49.76	42.00	7.76	10
Result		**Complied**			

Test Frequency (GHz)	Test Conditions	EIRP (dBm)	Antenna Gain (dBi)	Pout (dBm)	Limit (dBm)
60.48	NTNV	46.40	42.00	4.40	10
	HTHV	45.80	42.00	3.80	10
	HTLV	45.88	42.00	3.88	10
	LTHV	50.35	42.00	8.35	10
	LTLV	50.30	42.00	8.30	10
Result		**Complied**			

Test Frequency (GHz)	Test Conditions	EIRP (dBm)	Antenna Gain (dBi)	Pout (dBm)	Limit (dBm)
62.64	NTNV	45.26	42.00	3.26	10
	HTHV	44.43	42.00	2.43	10
	HTLV	44.39	42.00	2.39	10
	LTHV	50.26	42.00	8.26	10
	LTLV	50.29	42.00	8.29	10
Result		**Complied**			

Note: NTNV: Normal Temperature Normal Voltage
HTHV: High Temperature High Voltage
HTLV: High Temperature Low Voltage
LTHV: Low Temperature High Voltage
LTLV: Low Temperature Low Voltage

3.1.6 Test Result of EIRP and Power Tolerance

Test Frequency (GHz)	Test Conditions	Measured Power (dBm)	Output power tolerance (dB)	EIRP (dBm)	Limit (dBm)
58.32	NTNV	-36.24	2.00	45.33	52.00
	HTHV	-37.52	2.00	44.05	52.00
	HTLV	-37.54	2.00	44.03	52.00
	LTHV	-31.78	2.00	49.79	52.00
	LTLV	-31.81	2.00	49.76	52.00
Result		**Complied**			

Test Frequency (GHz)	Test Conditions	Measured Power (dBm)	Output power tolerance (dB)	EIRP (dBm)	Limit (dBm)
60.48	NTNV	-35.48	2.00	46.40	52.00
	HTHV	-36.08	2.00	45.80	52.00
	HTLV	-36.00	2.00	45.88	52.00
	LTHV	-31.53	2.00	50.35	52.00
	LTLV	-31.58	2.00	50.30	52.00
Result		**Complied**			

Test Frequency (GHz)	Test Conditions	Measured Power (dBm)	Output power tolerance (dB)	EIRP (dBm)	Limit (dBm)
62.64	NTNV	-36.93	2.00	45.26	52.00
	HTHV	-37.76	2.00	44.43	52.00
	HTLV	-37.80	2.00	44.39	52.00
	LTHV	-31.93	2.00	50.26	52.00
	LTLV	-31.90	2.00	50.29	52.00
Result		**Complied**			

Note: NTNV: Normal Temperature Normal Voltage
HTHV: High Temperature High Voltage
HTLV: High Temperature Low Voltage
LTHV: Low Temperature High Voltage
LTLV: Low Temperature Low Voltage
Test Distance : 55m

3.2 Radio Frequency Spectrum Mask

3.2.1 Limit of Spectrum Mask

Spectral efficiency		Min. RIC rate (Mbit/s)	Mask reference shape	K1(dB)	f1(MHz)	K2(dB)	f2(MHz)	K3(dB)	f3 (MHz)	K4(dB)	f4(MHz)	K5(dB)	f5(MHz)
Reference Index	Class												
1	1	N × 28,5 (7)	Figure 8(a)	3	N × 22,9	-18	N × 28	-23	N × 44,8	-40 (2)	N × 72,5	-40 (2)	(1)
2	2	N × 57											
3	3	N × 85											
4	4L	N × 114	Figure 8(b)	3	N × 22,9	-25	N × 29,8	-40 (2)	N × 62,8	-40 (2)	(1)		
5	4H	N x 175	Figure 8(c)	3	N × 22	-10	N × 26,8	-28	N × 29,8	-43 (3)	N × 69,6	-43 (3)	(1)
6	5LA	N x 210	Figure 8(d)	3	N × 22	-10	N × 26,8	-31	N × 30,2	-45 (4)	N × 69,6	-45 (4)	(1)
7	5HA	N x 245						-34	N × 30,8	-45 (5)		-45 (5)	
8	6LA	N x 280						-37	N × 31,2	-45 (6)		-45 (6)	
6	5LB	N x 210	Figure 8(e)	3	N × 21,4	-10	N × 25,9	-31	N × 27,6	-45 (4)	N × 69,6	-45 (4)	(1)
7	5HB	N x 245						-34	N × 27,8	-45 (5)		-45 (5)	
8	6LB	N x 280						-37	N × 28	-45 (6)		-45 (6)	

(1) For CS ≤ 500 MHz this value is CS × 2,5.
For CS > 500 MHz, this value is variable with CS (MHz) according the formula CS × 1,5 + 500.
(2) Attenuation less, in dB, than -40 + 10log(N/5) is not required.
(3) Attenuation less, in dB, than -43 + 10log(N/5) is not required.
(4) For N ≥ 10, attenuation less, in dB, than -46 + 10log(N/5) is not required.
(5) For N ≥ 15, attenuation less, in dBthan -49 + 10log(N/5) is not required.
(6) For N ≥ 30, attenuation less, in dB, than -52 + 10log(N/5) is not required.
(7) For N > 4 rounded down to the lower Mbit/s integer.
NOTE 1: N can vary from 1 to 40; however, equipment characteristics are not presented for all cases. See table H.2 in annex H for details.
NOTE 2: The 10log(N/5) value is intended truncated to the first decimal place.

3.2.2 Measuring Instruments

See list of measuring instruments of this test report.

3.2.3 Test Procedures

Method of measurement: see EN 301 126-1 v1.1.2 clause 5.2.6.

3.2.4 Test Setup

Radio Frequency Spectrum Mask

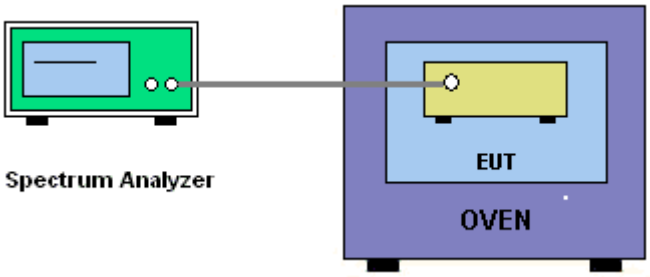

3.2.5 Test Result of Radio Frequency Spectrum Mask

Test Frequency (GHz): 58.32
Test Conditions: LTHV

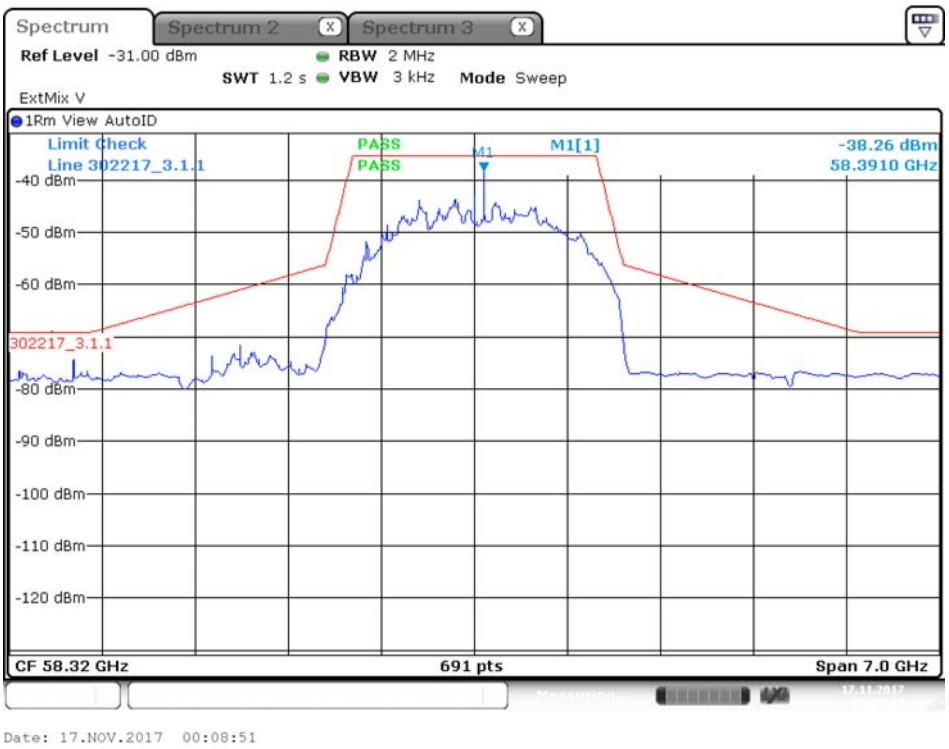

Note: NTNV: Normal Temperature Normal Voltage
HTHV: High Temperature High Voltage
HTLV: High Temperature Low Voltage
LTHV: Low Temperature High Voltage
LTLV: Low Temperature Low Voltage

Test Frequency (GHz): 60.48
Test Conditions: LTHV

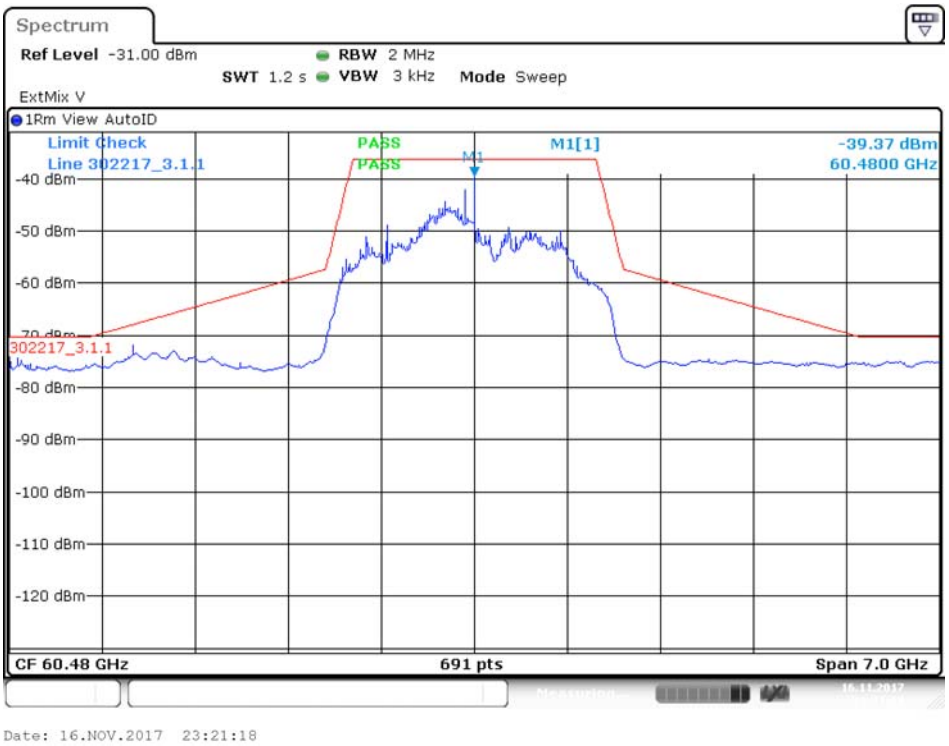

Note: NTNV: Normal Temperature Normal Voltage
HTHV: High Temperature High Voltage
HTLV: High Temperature Low Voltage
LTHV: Low Temperature High Voltage
LTLV: Low Temperature Low Voltage

Test Frequency (GHz): 62.64
Test Conditions: LTHV

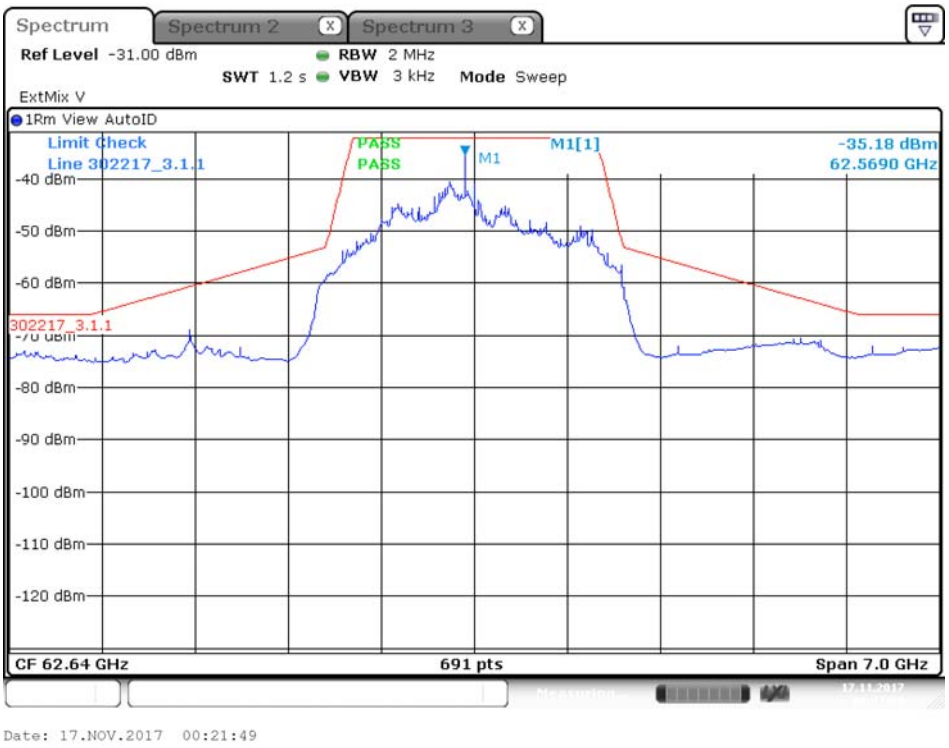

Note: NTNV: Normal Temperature Normal Voltage
HTHV: High Temperature High Voltage
HTLV: High Temperature Low Voltage
LTHV: Low Temperature High Voltage
LTLV: Low Temperature Low Voltage

3.3 Transmitter Spurious Emissions

3.3.1 Limit of Transmitter Spurious Emissions

Please refer CEPT/ERC Recommendation 74-01 Annex 1 (Fixed Service).

3.3.2 Measuring Instruments

See list of measuring instruments of this test report.

3.3.3 Test Procedures

- Method of measurement: see EN 301 126-1 v1.1.2 clause 5.2.9.
- Transmitter spurious emissions shall fulfill the CEPT/ERC Recommendation 74-01 Annex 1 (Fixed Service) limits.

3.3.4 Test Setup

Transmitter Spurious Emissions

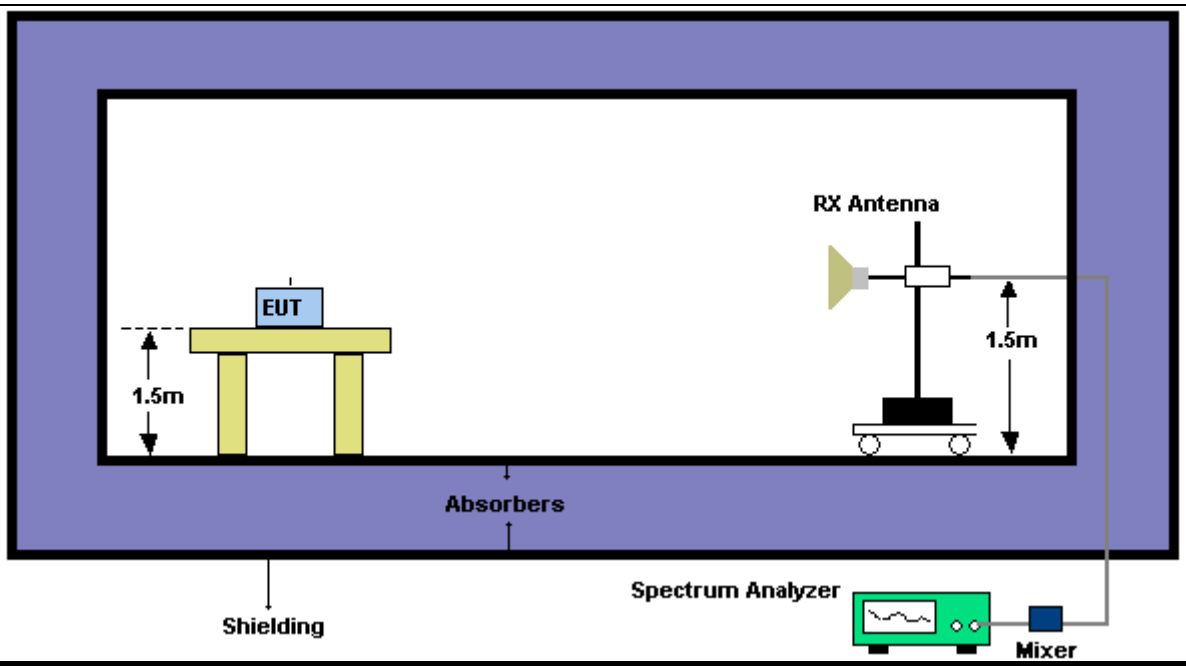

3.3.5 Test Result of Transmitter Spurious Emissions

Test Frequency (GHz)	58.32	Test Range	9kHz~1GHz

Horizontal

	Freq	Level	Over Limit	Limit Line	Read Level	Factor	Pol/Phase
	MHz	dBm	dB	dBm	dBm	dB	
1	267.65	-61.87	-11.87	-50.00	-57.03	-4.84	HORIZONTAL
2	401.51	-62.22	-12.22	-50.00	-60.45	-1.77	HORIZONTAL
3	459.71	-60.05	-10.05	-50.00	-60.17	0.12	HORIZONTAL
4	566.41	-59.28	-9.28	-50.00	-60.78	1.50	HORIZONTAL
5	729.37	-59.25	-9.25	-50.00	-62.48	3.23	HORIZONTAL
6	770.11	-57.98	-7.98	-50.00	-61.70	3.72	HORIZONTAL

Vertical

	Freq	Level	Over Limit	Limit Line	Read Level	Factor	Pol/Phase
	MHz	dBm	dB	dBm	dBm	dB	
1	261.83	-61.02	-11.02	-50.00	-58.51	-2.51	VERTICAL
2	357.86	-60.28	-10.28	-50.00	-59.71	-0.57	VERTICAL
3	443.22	-59.30	-9.30	-50.00	-60.76	1.46	VERTICAL
4	562.53	-59.99	-9.99	-50.00	-63.34	3.35	VERTICAL
5	646.92	-61.66	-11.66	-50.00	-65.91	4.25	VERTICAL
6	771.08	-60.07	-10.07	-50.00	-66.22	6.15	VERTICAL

Note:

Note 1: “>6dB” means spurious emission levels that exceed the level of 6 dB below the applicable limit.
Note 2: “N/F” means Nothing Found spurious emissions (No spurious emissions were detected.)
Note 3: Measurement receive antenna polarization: H (Horizontal), V (Vertical)
Note 4: Factor: Transmit Antenna Gain + Signal Generator Level - SA reading - Transmit Cable Loss.
Level= Read Level + Factor.

Test Frequency (GHz)	60.48	Test Range	9kHz~1GHz

Horizontal

	Freq	Level	Over Limit	Limit Line	Read Level	Factor	Pol/Phase
	MHz	dBm	dB	dBm	dBm	dB	
1	274.44	-61.53	-11.53	-50.00	-56.93	-4.60	HORIZONTAL
2	401.51	-62.22	-12.22	-50.00	-60.45	-1.77	HORIZONTAL
3	489.78	-60.70	-10.70	-50.00	-61.80	1.10	HORIZONTAL
4	548.95	-58.57	-8.57	-50.00	-60.04	1.47	HORIZONTAL
5	601.33	-60.12	-10.12	-50.00	-61.67	1.55	HORIZONTAL
6	655.65	-58.22	-8.22	-50.00	-60.51	2.29	HORIZONTAL

Vertical

	Freq	Level	Over Limit	Limit Line	Read Level	Factor	Pol/Phase
	MHz	dBm	dB	dBm	dBm	dB	
1	292.87	-59.64	-9.64	-50.00	-57.40	-2.24	VERTICAL
2	390.84	-57.61	-7.61	-50.00	-57.97	0.36	VERTICAL
3	486.87	-60.88	-10.88	-50.00	-63.19	2.31	VERTICAL
4	582.90	-61.49	-11.49	-50.00	-65.10	3.61	VERTICAL
5	657.59	-59.48	-9.48	-50.00	-63.83	4.35	VERTICAL
6	770.11	-59.56	-9.56	-50.00	-65.70	6.14	VERTICAL

Note:

Note 1: “>6dB” means spurious emission levels that exceed the level of 6 dB below the applicable limit.
Note 2: “N/F” means Nothing Found spurious emissions (No spurious emissions were detected.)
Note 3: Measurement receive antenna polarization: H (Horizontal), V (Vertical)
Note 4: Factor: Transmit Antenna Gain + Signal Generator Level - SA reading - Transmit Cable Loss.
Level= Read Level + Factor.

Test Frequency (GHz)	62.64	Test Range	9kHz~1GHz

Horizontal

	Freq	Level	Over Limit	Limit Line	Read Level	Factor	Pol/Phase
	MHz	dBm	dB	dBm	dBm	dB	
1	241.46	-66.48	-16.48	-50.00	-60.68	-5.80	HORIZONTAL
2	340.40	-60.36	-10.36	-50.00	-57.43	-2.93	HORIZONTAL
3	375.32	-67.52	-17.52	-50.00	-65.25	-2.27	HORIZONTAL
4	476.20	-61.57	-11.57	-50.00	-62.22	0.65	HORIZONTAL
5	601.33	-61.12	-11.12	-50.00	-62.67	1.55	HORIZONTAL
6	640.13	-58.72	-8.72	-50.00	-60.80	2.08	HORIZONTAL

Vertical

	Freq	Level	Over Limit	Limit Line	Read Level	Factor	Pol/Phase
	MHz	dBm	dB	dBm	dBm	dB	
1	229.82	-62.73	-12.73	-50.00	-59.61	-3.12	VERTICAL
2	367.56	-60.84	-10.84	-50.00	-60.54	-0.30	VERTICAL
3	453.89	-63.21	-13.21	-50.00	-64.88	1.67	VERTICAL
4	590.66	-60.78	-10.78	-50.00	-64.49	3.71	VERTICAL
5	638.19	-61.90	-11.90	-50.00	-66.07	4.17	VERTICAL
6	673.11	-63.87	-13.87	-50.00	-68.36	4.49	VERTICAL

Note:

Note 1: “>6dB” means spurious emission levels that exceed the level of 6 dB below the applicable limit.
Note 2: “N/F” means Nothing Found spurious emissions (No spurious emissions were detected.)
Note 3: Measurement receive antenna polarization: H (Horizontal), V (Vertical)
Note 4: Factor: Transmit Antenna Gain + Signal Generator Level - SA reading - Transmit Cable Loss.
Level= Read Level + Factor.

Test Frequency (GHz)	58.32	Test Range	1GHz~21.2GHz

Horizontal

	Freq	Level	Over Limit	Limit Line	Read Level	Factor	Pol/Phase
	MHz	dBm	dB	dBm	dBm	dB	
1	1596.61	-59.22	-9.22	-50.00	-44.74	-14.48	HORIZONTAL

Vertical

	Freq	Level	Over Limit	Limit Line	Read Level	Factor	Pol/Phase
	MHz	dBm	dB	dBm	dBm	dB	
1	1597.46	-59.12	-9.12	-50.00	-44.48	-14.64	VERTICAL

Note:

Note 1: “>6dB” means spurious emission levels that exceed the level of 6 dB below the applicable limit.
Note 2: “N/F” means Nothing Found spurious emissions (No spurious emissions were detected.)
Note 3: Measurement receive antenna polarization: H (Horizontal), V (Vertical)
Note 4: Factor: Transmit Antenna Gain + Signal Generator Level - SA reading - Transmit Cable Loss.
Level= Read Level + Factor.

Test Frequency (GHz)	60.48	Test Range	1GHz~21.2GHz

Horizontal

	Freq	Level	Over Limit	Limit Line	Read Level	Factor	Pol/Phase
	MHz	dBm	dB	dBm	dBm	dB	
1	1596.28	-59.41	-9.41	-50.00	-44.93	-14.48	HORIZONTAL

Vertical

	Freq	Level	Over Limit	Limit Line	Read Level	Factor	Pol/Phase
	MHz	dBm	dB	dBm	dBm	dB	
1	1594.39	-59.59	-9.59	-50.00	-44.89	-14.70	VERTICAL

Note:

Note 1: “>6dB” means spurious emission levels that exceed the level of 6 dB below the applicable limit.
Note 2: “N/F” means Nothing Found spurious emissions (No spurious emissions were detected.)
Note 3: Measurement receive antenna polarization: H (Horizontal), V (Vertical)
Note 4: Factor: Transmit Antenna Gain + Signal Generator Level - SA reading - Transmit Cable Loss.
Level= Read Level + Factor.

Test Frequency (GHz)	62.64	Test Range	1GHz~21.2GHz

Horizontal

	Freq	Level	Over Limit	Limit Line	Read Level	Factor	Pol/Phase
	MHz	dBm	dB	dBm	dBm	dB	
1	1598.88	-59.03	-9.03	-50.00	-44.55	-14.48	HORIZONTAL

Vertical

	Freq	Level	Over Limit	Limit Line	Read Level	Factor	Pol/Phase
	MHz	dBm	dB	dBm	dBm	dB	
1	1593.49	-59.02	-9.02	-50.00	-44.32	-14.70	VERTICAL

Note:

Note 1: “>6dB” means spurious emission levels that exceed the level of 6 dB below the applicable limit.
Note 2: “N/F” means Nothing Found spurious emissions (No spurious emissions were detected.)
Note 3: Measurement receive antenna polarization: H (Horizontal), V (Vertical)
Note 4: Factor: Transmit Antenna Gain + Signal Generator Level - SA reading - Transmit Cable Loss.
Level= Read Level + Factor.

Test Frequency (GHz)	58.32	Test Range	21.2GHz~40GHz

Horizontal

	Freq	Level	Over Limit	Limit Line	Read Level	Factor	Pol/Phase
	MHz	dBm	dB	dBm	dBm	dB	
1	36994.33	-48.87	-18.87	-30.00	-61.91	13.04	HORIZONTAL

Vertical

	Freq	Level	Over Limit	Limit Line	Read Level	Factor	Pol/Phase
	MHz	dBm	dB	dBm	dBm	dB	
1	36986.51	-48.50	-18.50	-30.00	-60.66	12.16	VERTICAL

Note:

Note 1: “>6dB” means spurious emission levels that exceed the level of 6 dB below the applicable limit.
Note 2: “N/F” means Nothing Found spurious emissions (No spurious emissions were detected.)
Note 3: Measurement receive antenna polarization: H (Horizontal), V (Vertical)
Note 4: Factor: Transmit Antenna Gain + Signal Generator Level - SA reading - Transmit Cable Loss.
Level= Read Level + Factor.

Test Frequency (GHz)	60.48	Test Range	21.2GHz~40GHz

Horizontal

	Freq	Level	Over Limit	Limit Line	Read Level	Factor	Pol/Phase
	MHz	dBm	dB	dBm	dBm	dB	
1	36903.51	-48.36	-18.36	-30.00	-61.23	12.87	HORIZONTAL

Vertical

	Freq	Level	Over Limit	Limit Line	Read Level	Factor	Pol/Phase
	MHz	dBm	dB	dBm	dBm	dB	
1	36914.32	-48.33	-18.33	-30.00	-60.36	12.03	VERTICAL

Note:

Note 1: “>6dB” means spurious emission levels that exceed the level of 6 dB below the applicable limit.
Note 2: “N/F” means Nothing Found spurious emissions (No spurious emissions were detected.)
Note 3: Measurement receive antenna polarization: H (Horizontal), V (Vertical)
Note 4: Factor: Transmit Antenna Gain + Signal Generator Level - SA reading - Transmit Cable Loss.
Level= Read Level + Factor.

Test Frequency (GHz)	62.64	Test Range	21.2GHz~40GHz

Horizontal

	Freq	Level	Over Limit	Limit Line	Read Level	Factor	Pol/Phase
	MHz	dBm	dB	dBm	dBm	dB	
1	36943.57	-48.16	-18.16	-30.00	-61.09	12.93	HORIZONTAL

Vertical

	Freq	Level	Over Limit	Limit Line	Read Level	Factor	Pol/Phase
	MHz	dBm	dB	dBm	dBm	dB	
1	36993.30	-48.82	-18.82	-30.00	-60.98	12.16	VERTICAL

Note:

Note 1: “>6dB” means spurious emission levels that exceed the level of 6 dB below the applicable limit.
Note 2: “N/F” means Nothing Found spurious emissions (No spurious emissions were detected.)
Note 3: Measurement receive antenna polarization: H (Horizontal), V (Vertical)
Note 4: Factor: Transmit Antenna Gain + Signal Generator Level - SA reading - Transmit Cable Loss.
Level= Read Level + Factor.

Test Frequency (GHz)		58.32		Test Range	40GHz~132GHz	
Test Results						
Frequency (GHz)	Test Distance (m)	Rx Power (dBm)	Rx Ant. Gain (dBi)	EIRP Power (dBm)	Limit (dBm)	Result
40.85	1.00	-81.69	23.00	-40.02	-30.00	Complied

Test Frequency (GHz)		60.48		Test Range	40GHz~132GHz	
Test Results						
Frequency (GHz)	Test Distance (m)	Rx Power (dBm)	Rx Ant. Gain (dBi)	EIRP Power (dBm)	Limit (dBm)	Result
40.96	1.00	-83.45	23.00	-41.76	-30.00	Complied

Test Frequency (GHz)		62.64		Test Range	40GHz~132GHz	
Test Results						
Frequency (GHz)	Test Distance (m)	Rx Power (dBm)	Rx Ant. Gain (dBi)	EIRP Power (dBm)	Limit (dBm)	Result
56.57	1.00	-84.12	23.00	-39.63	-30.00	Complied

3.4 Transmitter Frequency Tolerance

3.4.1 Limit of Transmitter Frequency Tolerance

Frequency Band	Tolerance Limit
Below 3 GHz	N/A
Above 57GHz	± 50 ppm
Other	± 15 ppm
Note: These measurements shall also be performed at normal and extreme test conditions.	

3.4.2 Measuring Instruments

See list of measuring instruments of this test report.

3.4.3 Test Procedures

Method of measurement: see EN 301 126-1 v1.1.2 clause 5.2.5.

3.4.4 Test Setup

Transmitter Frequency Tolerance

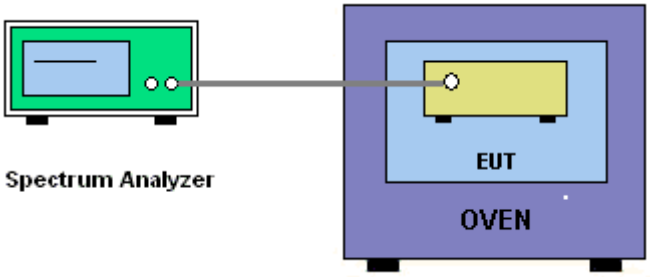

3.4.5 Test Result of Frequency Tolerance

Test Conditions	Measured Frequency (MHz)		
	58320	60480	62640
NTNV	58320.0864	60479.9986	62639.9283
HTHV	58320.0868	60479.9980	62640.0547
HTLV	58320.0869	60479.9979	62640.0549
LTHV	58320.0867	60479.9962	62640.0122
LTLV	58320.0867	60479.9963	62640.0125
Max. Deviation Frequency	0.0869	0.0038	0.0717
Max. Frequency Error (ppm)	1.49	0.06	1.14
Limit (ppm)	50	50	50
Result	**Complied**		

Note: NTNV: Normal Temperature Normal Voltage
HTHV: High Temperature High Voltage
HTLV: High Temperature Low Voltage
LTHV: Low Temperature High Voltage
LTLV: Low Temperature Low Voltage

4 Receiver Test Result

4.1 Receiver Spurious Emissions

4.1.1 Limit of Receiver Spurious Emissions

Please refer CEPT/ERC Recommendation 74-01 Annex 1 (Fixed Service).

4.1.2 Measuring Instruments

See list of measuring instruments of this test report.

4.1.3 Test Procedures

- Method of measurement: see EN 301 126-1 v1.1.2 clause 5.3.2.
- Transmitter spurious emissions shall fulfill the CEPT/ERC Recommendation 74-01 Annex 1 (Fixed Service) limits.

4.1.4 Test Setup

Receiver Spurious Emissions

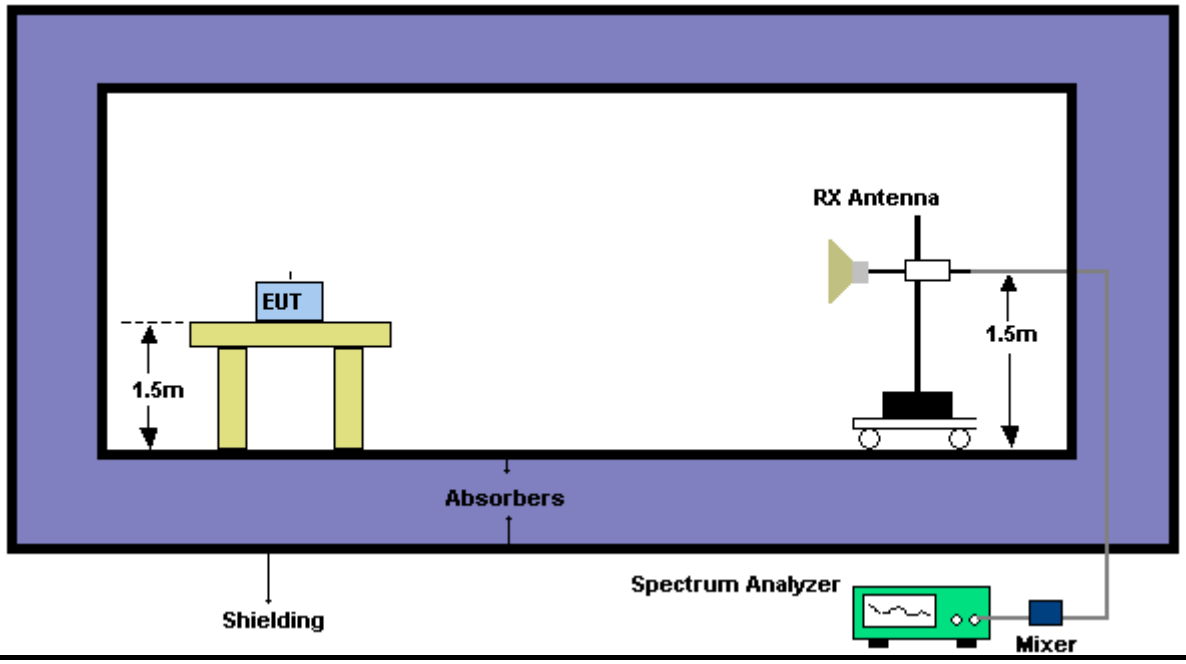

4.1.5 Test Result of Receiver Spurious Emissions

Test Frequency (GHz)	58.32	Test Range	9kHz~1GHz

Horizontal

	Freq	Level	Over Limit	Limit Line	Read Level	Factor	Pol/Phase
	MHz	dBm	dB	dBm	dBm	dB	
1	228.85	-58.83	-8.83	-50.00	-52.56	-6.27	HORIZONTAL
2	300.63	-62.86	-12.86	-50.00	-59.20	-3.66	HORIZONTAL
3	386.96	-61.26	-11.26	-50.00	-59.20	-2.06	HORIZONTAL
4	469.41	-67.75	-17.75	-50.00	-68.18	0.43	HORIZONTAL
5	633.34	-60.25	-10.25	-50.00	-62.24	1.99	HORIZONTAL
6	672.14	-63.62	-13.62	-50.00	-66.13	2.51	HORIZONTAL

Vertical

	Freq	Level	Over Limit	Limit Line	Read Level	Factor	Pol/Phase
	MHz	dBm	dB	dBm	dBm	dB	
1	224.97	-58.13	-8.13	-50.00	-54.89	-3.24	VERTICAL
2	313.24	-60.23	-10.23	-50.00	-58.43	-1.80	VERTICAL
3	412.18	-60.87	-10.87	-50.00	-61.73	0.86	VERTICAL
4	520.82	-58.68	-8.68	-50.00	-61.51	2.83	VERTICAL
5	592.60	-64.22	-14.22	-50.00	-67.95	3.73	VERTICAL
6	672.14	-61.65	-11.65	-50.00	-66.13	4.48	VERTICAL

Note:

Note 1: “>6dB” means spurious emission levels that exceed the level of 6 dB below the applicable limit.
Note 2: “N/F” means Nothing Found spurious emissions (No spurious emissions were detected.)
Note 3: Measurement receive antenna polarization: H (Horizontal), V (Vertical)
Note 4: Factor: Transmit Antenna Gain + Signal Generator Level - SA reading - Transmit Cable Loss.
Level= Read Level + Factor.

Test Frequency (GHz)	60.48	Test Range	9kHz~1GHz

Horizontal

	Freq	Level	Over Limit	Limit Line	Read Level	Factor	Pol/Phase
	MHz	dBm	dB	dBm	dBm	dB	
1	248.25	-60.93	-10.93	-50.00	-55.38	-5.55	HORIZONTAL
2	390.84	-61.04	-11.04	-50.00	-59.06	-1.98	HORIZONTAL
3	605.21	-61.06	-11.06	-50.00	-62.67	1.61	HORIZONTAL
4	642.07	-58.70	-8.70	-50.00	-60.80	2.10	HORIZONTAL
5	780.78	-59.89	-9.89	-50.00	-63.74	3.85	HORIZONTAL
6	842.86	-61.95	-11.95	-50.00	-66.92	4.97	HORIZONTAL

Vertical

	Freq	Level	Over Limit	Limit Line	Read Level	Factor	Pol/Phase
	MHz	dBm	dB	dBm	dBm	dB	
1	267.65	-59.75	-9.75	-50.00	-57.29	-2.46	VERTICAL
2	342.34	-66.34	-16.34	-50.00	-65.33	-1.01	VERTICAL
3	417.03	-60.58	-10.58	-50.00	-61.53	0.95	VERTICAL
4	490.75	-62.42	-12.42	-50.00	-64.81	2.39	VERTICAL
5	614.91	-60.37	-10.37	-50.00	-64.33	3.96	VERTICAL
6	658.56	-61.86	-11.86	-50.00	-66.22	4.36	VERTICAL

Note:

Note 1: “>6dB” means spurious emission levels that exceed the level of 6 dB below the applicable limit.
Note 2: “N/F” means Nothing Found spurious emissions (No spurious emissions were detected.)
Note 3: Measurement receive antenna polarization: H (Horizontal), V (Vertical)
Note 4: Factor: Transmit Antenna Gain + Signal Generator Level - SA reading - Transmit Cable Loss.
Level= Read Level + Factor.

Test Frequency (GHz)	62.64	Test Range	9kHz~1GHz

Horizontal

	Freq	Level	Over Limit	Limit Line	Read Level	Factor	Pol/Phase
	MHz	dBm	dB	dBm	dBm	dB	
1	241.46	-62.48	-12.48	-50.00	-56.68	-5.80	HORIZONTAL
2	311.30	-58.64	-8.64	-50.00	-55.18	-3.46	HORIZONTAL
3	384.05	-59.76	-9.76	-50.00	-57.65	-2.11	HORIZONTAL
4	453.89	-58.95	-8.95	-50.00	-58.88	-0.07	HORIZONTAL
5	564.47	-59.25	-9.25	-50.00	-60.74	1.49	HORIZONTAL
6	637.22	-63.63	-13.63	-50.00	-65.67	2.04	HORIZONTAL

Vertical

	Freq	Level	Over Limit	Limit Line	Read Level	Factor	Pol/Phase
	MHz	dBm	dB	dBm	dBm	dB	
1	271.53	-59.07	-9.07	-50.00	-56.65	-2.42	VERTICAL
2	361.74	-62.89	-12.89	-50.00	-62.43	-0.46	VERTICAL
3	431.58	-59.40	-9.40	-50.00	-60.64	1.24	VERTICAL
4	613.94	-60.76	-10.76	-50.00	-64.71	3.95	VERTICAL
5	656.62	-62.80	-12.80	-50.00	-67.14	4.34	VERTICAL
6	685.72	-60.13	-10.13	-50.00	-64.74	4.61	VERTICAL

Note:

Note 1: “>6dB” means spurious emission levels that exceed the level of 6 dB below the applicable limit.
Note 2: “N/F” means Nothing Found spurious emissions (No spurious emissions were detected.)
Note 3: Measurement receive antenna polarization: H (Horizontal), V (Vertical)
Note 4: Factor: Transmit Antenna Gain + Signal Generator Level - SA reading - Transmit Cable Loss.
Level= Read Level + Factor.

Test Frequency (GHz)	58.32	Test Range	1GHz~21.2GHz

Horizontal

	Freq	Level	Over Limit	Limit Line	Read Level	Factor	Pol/Phase
	MHz	dBm	dB	dBm	dBm	dB	
1	3492.72	-64.03	-14.03	-50.00	-55.34	-8.69	HORIZONTAL

Vertical

	Freq	Level	Over Limit	Limit Line	Read Level	Factor	Pol/Phase
	MHz	dBm	dB	dBm	dBm	dB	
1	3489.71	-64.30	-14.30	-50.00	-55.70	-8.60	VERTICAL

Note:

Note 1: “>6dB” means spurious emission levels that exceed the level of 6 dB below the applicable limit.
Note 2: “N/F” means Nothing Found spurious emissions (No spurious emissions were detected.)
Note 3: Measurement receive antenna polarization: H (Horizontal), V (Vertical)
Note 4: Factor: Transmit Antenna Gain + Signal Generator Level - SA reading - Transmit Cable Loss.
Level= Read Level + Factor.

Test Frequency (GHz)	60.48	Test Range	1GHz~21.2GHz

Horizontal

	Freq	Level	Over Limit	Limit Line	Read Level	Factor	Pol/Phase
	MHz	dBm	dB	dBm	dBm	dB	
1	3497.40	-64.94	-14.94	-50.00	-56.25	-8.69	HORIZONTAL

Vertical

	Freq	Level	Over Limit	Limit Line	Read Level	Factor	Pol/Phase
	MHz	dBm	dB	dBm	dBm	dB	
1	3494.47	-64.40	-14.40	-50.00	-55.82	-8.58	VERTICAL

Note:

Note 1: “>6dB” means spurious emission levels that exceed the level of 6 dB below the applicable limit.
Note 2: “N/F” means Nothing Found spurious emissions (No spurious emissions were detected.)
Note 3: Measurement receive antenna polarization: H (Horizontal), V (Vertical)
Note 4: Factor: Transmit Antenna Gain + Signal Generator Level - SA reading - Transmit Cable Loss.
Level= Read Level + Factor.

Test Frequency (GHz)	62.64	Test Range	1GHz~21.2GHz

Horizontal

	Freq	Level	Over Limit	Limit Line	Read Level	Factor	Pol/Phase
	MHz	dBm	dB	dBm	dBm	dB	
1	3486.29	-64.01	-14.01	-50.00	-55.30	-8.71	HORIZONTAL

Vertical

	Freq	Level	Over Limit	Limit Line	Read Level	Factor	Pol/Phase
	MHz	dBm	dB	dBm	dBm	dB	
1	3497.47	-64.04	-14.04	-50.00	-55.46	-8.58	VERTICAL

Note:

Note 1: “>6dB” means spurious emission levels that exceed the level of 6 dB below the applicable limit.
Note 2: “N/F” means Nothing Found spurious emissions (No spurious emissions were detected.)
Note 3: Measurement receive antenna polarization: H (Horizontal), V (Vertical)
Note 4: Factor: Transmit Antenna Gain + Signal Generator Level - SA reading - Transmit Cable Loss.
Level= Read Level + Factor.

Test Frequency (GHz)	58.32	Test Range	21.2GHz~40GHz

Horizontal

	Freq	Level	Over Limit	Limit Line	Read Level	Factor	Pol/Phase
	MHz	dBm	dB	dBm	dBm	dB	
1	32486.14	-51.58	-21.58	-30.00	-64.48	12.90	HORIZONTAL

Vertical

	Freq	Level	Over Limit	Limit Line	Read Level	Factor	Pol/Phase
	MHz	dBm	dB	dBm	dBm	dB	
1	32481.25	-51.35	-21.35	-30.00	-64.41	13.06	VERTICAL

Note:

Note 1: “>6dB” means spurious emission levels that exceed the level of 6 dB below the applicable limit.
Note 2: “N/F” means Nothing Found spurious emissions (No spurious emissions were detected.)
Note 3: Measurement receive antenna polarization: H (Horizontal), V (Vertical)
Note 4: Factor: Transmit Antenna Gain + Signal Generator Level - SA reading - Transmit Cable Loss.
Level= Read Level + Factor.

Test Frequency (GHz)	60.48	Test Range	21.2GHz~40GHz

Horizontal

	Freq	Level	Over Limit	Limit Line	Read Level	Factor	Pol/Phase
	MHz	dBm	dB	dBm	dBm	dB	
1	32460.08	-50.66	-20.66	-30.00	-63.59	12.93	HORIZONTAL

Vertical

	Freq	Level	Over Limit	Limit Line	Read Level	Factor	Pol/Phase
	MHz	dBm	dB	dBm	dBm	dB	
1	32523.07	-51.40	-21.40	-30.00	-64.40	13.00	VERTICAL

Note:

Note 1: “>6dB” means spurious emission levels that exceed the level of 6 dB below the applicable limit.
Note 2: “N/F” means Nothing Found spurious emissions (No spurious emissions were detected.)
Note 3: Measurement receive antenna polarization: H (Horizontal), V (Vertical)
Note 4: Factor: Transmit Antenna Gain + Signal Generator Level - SA reading - Transmit Cable Loss.
Level= Read Level + Factor.

Test Frequency (GHz)	62.64	Test Range	21.2GHz~40GHz

Horizontal

	Freq	Level	Over Limit	Limit Line	Read Level	Factor	Pol/Phase
	MHz	dBm	dB	dBm	dBm	dB	
1	32492.58	-51.07	-21.07	-30.00	-63.95	12.88	HORIZONTAL

Vertical

	Freq	Level	Over Limit	Limit Line	Read Level	Factor	Pol/Phase
	MHz	dBm	dB	dBm	dBm	dB	
1	32506.12	-51.23	-21.23	-30.00	-64.26	13.03	VERTICAL

Note:

Note 1: “>6dB” means spurious emission levels that exceed the level of 6 dB below the applicable limit.
Note 2: “N/F” means Nothing Found spurious emissions (No spurious emissions were detected.)
Note 3: Measurement receive antenna polarization: H (Horizontal), V (Vertical)
Note 4: Factor: Transmit Antenna Gain + Signal Generator Level - SA reading - Transmit Cable Loss.
Level= Read Level + Factor.

Test Frequency (GHz)		58.32		Test Range	40GHz~132GHz	
Test Results						
Frequency (GHz)	Test Distance (m)	Rx Power (dBm)	Rx Ant. Gain (dBi)	EIRP Power (dBm)	Limit (dBm)	Result
40.39	1.00	-81.22	23.00	-39.65	-30.00	Complied

Test Frequency (GHz)		60.48		Test Range	40GHz~132GHz	
Test Results						
Frequency (GHz)	Test Distance (m)	Rx Power (dBm)	Rx Ant. Gain (dBi)	EIRP Power (dBm)	Limit (dBm)	Result
40.68	1.00	-81.41	23.00	-39.78	-30.00	Complied

Test Frequency (GHz)		62.64		Test Range	40GHz~132GHz	
Test Results						
Frequency (GHz)	Test Distance (m)	Rx Power (dBm)	Rx Ant. Gain (dBi)	EIRP Power (dBm)	Limit (dBm)	Result
56.74	1.00	-82.23	23.00	-37.71	-30.00	Complied

4.2 Minimum RSL

4.2.1 Limit of Minimum RSL

Spectral efficiency		Minimum RIC rate (Mbit/s)	Channel separation (MHz)	RSL for BER ≤ 10^{-6} (dBm) (see note 2)	RSL for BER ≤ 10^{-10} (dBm) (see note 2)
Reference index	Class				
1	1	28,5	50	-73	-71
		28,5 × N (N < 40) (see note 1)	N × 50 (N < 40)	-73 + 10logN	-71 + 10logN
		1 140	2 000 (N = 40)	-57	-55
2	2	57	50	-71	-69
		57 × N (N < 40)	N × 50 (N < 40)	-71 + 10logN	-69 + 10logN
		1 140	2 000 (N = 40)	-55	-53
3	3	85	50	-68	-66
		85 × N (N < 40)	N × 50 (N < 40)	-68 + 10logN	-66 + 10logN
		1 140	2 000 (N = 40)	-52	-50
4	4L	114	50	-65,5	-61,5
		114 × N (N < 25)	N × 50 (N < 25)	-65,5 + 10logN	-61,5 + 10logN
		2 850	1 250 (N = 25)	-51,5	-47,5
5	4H	175	50	-62	-58
		175 × N (N < 15)	N × 50 (N < 15)	-62 + 10logN	-58 + 10logN
		2 625	750 (N = 15)	-50	-46
6	5LA/5LB	210	50	-58,5	-54,5
		210 × N (N < 15)	N × 50 (N < 15)	-58,5 + 10logN	-54,5 + 10logN
		3 150	750 (N = 15)	-46,5	-42,5
7	5HA/5HB	245	50	-55	-51
		245 × N (N < 10)	N × 50 (N < 10)	-55 + 10logN	-51 + 10logN
		2 450	500 (N = 10)	-45	-41
8	6LA/6LB	280	50	-51	-47
		280 × N (N < 10)	N × 50 (N < 10)	-51 + 10logN	-47 + 10logN
		2 800	500 (N = 10)	-41	-37

NOTE 1: For N > 4 rounded down to the lower Mbit/s integer.
NOTE 2: Value of 10logN rounded to the closest 1/2 dB granularity.
NOTE 3: For *channels-aggregation/single-port* equipment, in the event that the device combining the two received signals is integrated in the equipment, the RSL thresholds will be relaxed by the combining device loss(e.g. 3 dB for a hybrid coupler).

4.2.2 Measuring Instruments

See list of measuring instruments of this test report.

4.2.3 Test Procedures

Method of measurement: see EN 301 126-1 v1.1.2 clause 5.3.3.1.

4.2.4 Test Setup

Minimum RSL

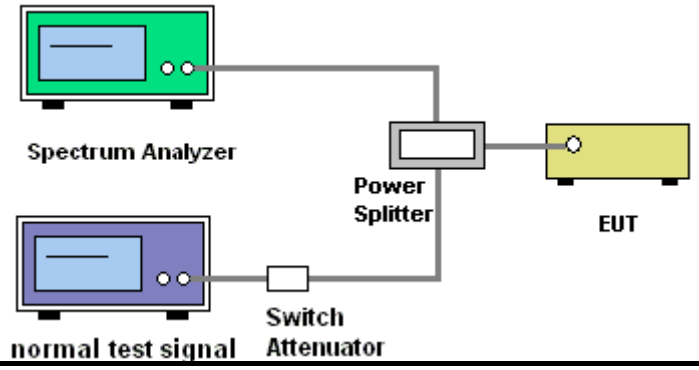

4.2.5 Test Result of Minimum RSL

Minimum RSL						
Frequency Band	57-66GHz	**Test Freq. (GHz)**		**58.32**	**60.48**	**62.64**
Channel arrangements	ACCP	**Tnom**	**Vnom**	-81.20	-80.69	-80.26
Modulation	2000M-BPSK	**Tmin**	**Vnom**	-	-79.24	-
CS (MHz)	2000	**Tmax**	**Vnom**	-	-80.97	-
Spectral efficiency classes	1	**BER Criteria**		1.00E-06		
N	40	**Complied Limit**		-57.0		

Minimum RSL						
Frequency Band	57-66GHz	**Test Freq. (GHz)**		**58.32**	**60.48**	**62.64**
Channel arrangements	ACCP	**Tnom**	**Vnom**	-79.23	-79.66	-79.69
Modulation	2000M-QPSK	**Tmin**	**Vnom**	-	-79.10	-
CS (MHz)	2000	**Tmax**	**Vnom**	-	-80.45	-
Spectral efficiency classes	2	**BER Criteria**		1.00E-06		
N	40	**Complied Limit**		-55.0		

4.3 Co-channel Interference

4.3.1 Limit of Co-channel Interference

Spectral efficiency		Min. RIC rate (Mbit/s)	Channel separation (MHz)	C/I for BER ≤ 10^{-6} RSL degradation of 1 dB or 3 dB			
				Co-channel interference		Adjacent channel interference	
Reference index	Class			1 dB	3 dB	1 dB	3 dB
1	1	28,5 × N (1 ≤ N ≤ 40) (see note)	N × 50 (1 ≤ N ≤ 40)	23	19	0	-4
2	2	57 × N (1 ≤ N ≤ 40)					
3	3	85 × N (1 ≤ N ≤ 40)	N × 50 (1 ≤ N ≤ 40)	25	21	0	-4
4	4L	114 × N (1 ≤ N ≤ 25)	N × 50 (1 ≤ N ≤ 25)	27	23	0	-4
5	4H	175 × N (1 ≤ N ≤ 15)	N × 50 (1 ≤ N ≤ 15)	30	26	-2	-6
6	5LB	210 × N (1 ≤ N ≤ 15)	N × 50 (ACCP) (1 ≤ N ≤ 15)	33,5	29,5	-6	-10
	5LA	210 × N (1 ≤ N ≤ 15)	N × 50 (ACAP) (1 ≤ N ≤ 15)	33,5	29,5	+3	-1
7	5HB	245 × N (1 ≤ N ≤ 10)	N × 50 (ACCP) (1 ≤ N ≤ 10)	37	33	-3	-7
	5HA	245 × N (1 ≤ N ≤ 10)	N × 50 (ACAP) (1 ≤ N ≤ 10)	37	33	+6	+2
8	6LB	280 × N (1 ≤ N ≤ 10)	N × 50 (ACCP) (1 ≤ N ≤ 10)	40,5	36,5	0	-4
	6LA	280 × N (1 ≤ N ≤ 10)	N × 50 (ACAP) (1 ≤ N ≤ 10)	40,5	36,5	+9	+5
NOTE: RIC rounded down to closest multiple of 1 Gbit/s rate shall also be considered valid.							

4.3.2 Measuring Instruments

See list of measuring instruments of this test report.

4.3.3 Test Procedures

Method of measurement: see EN 301 126-1 v1.1.2 clause 5.3.3.2.

4.3.4 Test Setup

Co-channel Interference

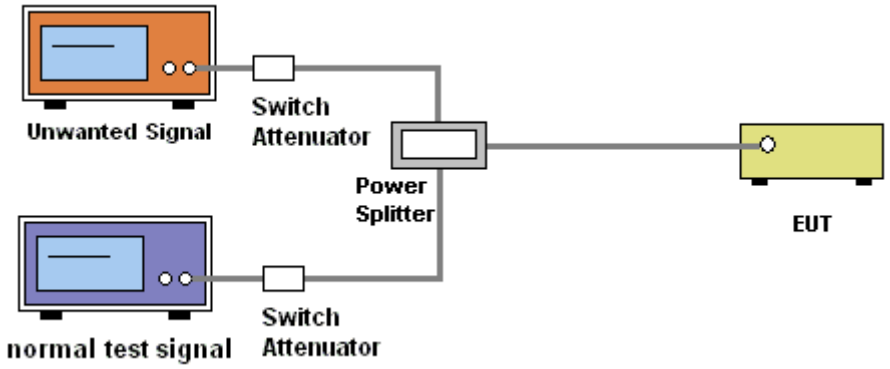

4.3.5 Test Result of Co-channel Interference

Co-channel Interference (Test Freq.: 60.48GHz)								
Frequency Band		57-66GHz	**Channel arrangements**		ACCP	**CS (MHz)**		2000
Spectral Classes	**N**	**Modulation**	**Wanted Signal (dBm)**	**Unwanted Signal (dBm)**	**C/I ratio (dB)**	**Degradation (dB)**	**Measure BER**	**BER Limit**
1	40	2000M-BPSK	-80.69	-103.69	23	1	9.63E-07	1.00E-06
2	40	2000M-QPSK	-79.66	-106.66	27	1	9.89E-07	1.00E-06

4.4 Adjacent Channel Interference Sensitivity

4.4.1 Limit of Adjacent Channel Interference Sensitivity

See this test report clause 4.3.1.

4.4.2 Measuring Instruments

See list of measuring instruments of this test report.

4.4.3 Test Procedures

Method of measurement: see EN 301 126-1 v1.1.2 clause 5.3.3.3.

4.4.4 Test Setup

Adjacent Channel Interference Sensitivity

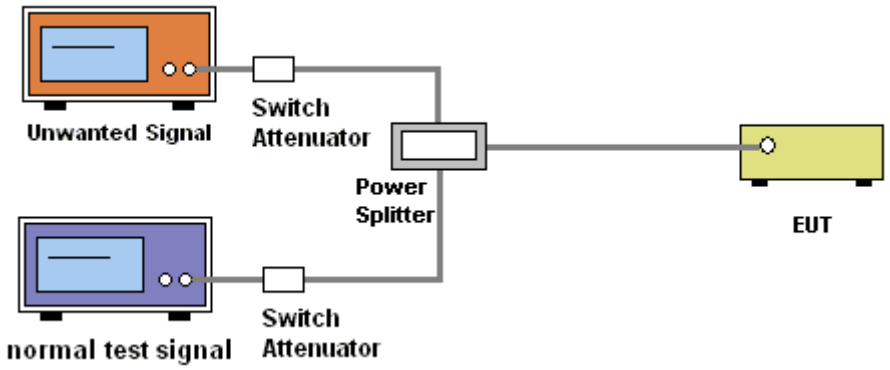

4.4.5 Test Result of Adjacent Channel Interference Sensitivity

Adjacent Channel Interference Sensitivity (Test Freq.: 60.48GHz)								
Frequency Band		57-66GHz	Channel arrangements		ACCP	CS (MHz)		2000
Spectral Classes	N	Modulation	Wanted Signal (dBm)	Unwanted Signal (dBm)	C/I ratio (dB)	Degradation (dB)	Measure BER	BER Limit
1	40	2000M-BPSK	-80.69	-80.69	0	1	9.25E-07	1.00E-06
2	40	2000M-QPSK	-79.66	-79.66	0	1	9.42E-07	1.00E-06

4.5 Second Adjacent Channel Interference Sensitivity

4.5.1 Limit of Second Adjacent Channel Interference Sensitivity

See this test report clause 4.3.1.

4.5.2 Measuring Instruments

See list of measuring instruments of this test report.

4.5.3 Test Procedures

Method of measurement: see EN 301 126-1 v1.1.2 clause 5.3.3.3.

4.5.4 Test Setup

Second Adjacent Channel Interference Sensitivity

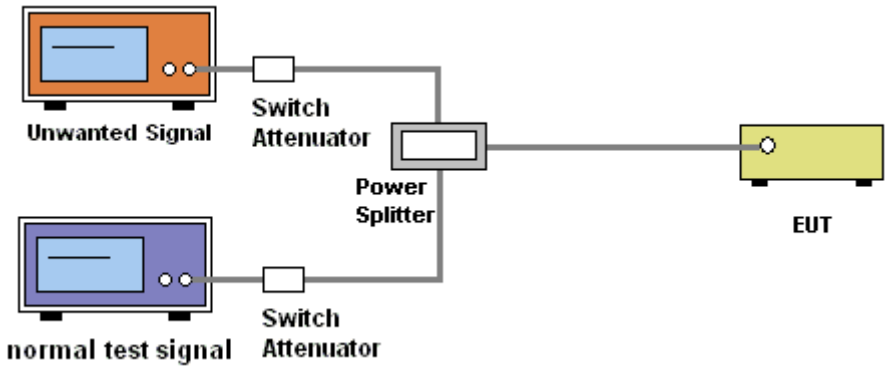

4.5.5 Test Result of Second Adjacent Channel Interference Sensitivity

Second Adjacent Channel Interference Sensitivity (Test Freq.: 60.48GHz)								
Frequency Band		57-66GHz	Channel arrangements		ACCP	CS (MHz)		2000
Spectral Classes	N	Modulation	Wanted Signal (dBm)	Unwanted Signal (dBm)	C/I ratio (dB)	Degradation (dB)	Measure BER	BER Limit
1	40	2000M-BPSK	-80.69	-80.69	0	1	9.74E-07	1.00E-06
2	40	2000M-QPSK	-79.66	-79.66	0	1	9.89E-07	1.00E-06

4.6 CW Interference

4.6.1 Limit of CW Interference

CW Interference				
Receive Range	CW Range	C/I ratio (dB)	BER Criteria	Degradation (dB)
5.2 – 13 GHz	30MHz – 26GHz	-30	10^{-5}	0
13 – 150 GHz	30MHz – 2th harmonic	-30	10^{-5}	0

4.6.2 Measuring Instruments

See list of measuring instruments of this test report.

4.6.3 Test Procedures

Method of measurement: see EN 301 126-1 v1.1.2 clause 5.3.3.4.

4.6.4 Test Setup

CW Interference

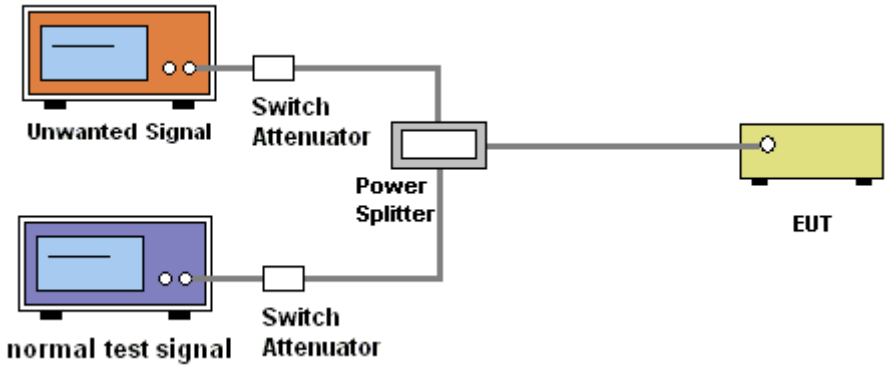

4.6.5 Test Result of CW Interference

CW Interference (Test Freq.: 60.48GHz)								
Frequency Band		57-66GHz	**Channel arrangements**		ACCP	**CS (MHz)**		2000
CW Signal Range		30MHz-2th Harmonic				**Out-Band CS %**		250%
Spectral Classes	**N**	**Modulation**	**Wanted Signal (dBm)**	**Unwanted Signal (dBm)**	**C/I ratio (dB)**	**Degradation (dB)**	**Measure BER**	**BER Limit**
1	40	2000M-BPSK	-80.69	-50.69	-30	0	9.65E-07	1.00E-05
2	40	2000M-QPSK	-79.66	-49.66	-30	0	9.15E-07	1.00E-05

5 List of Measuring Equipments

Instrument	Manufacturer	Model No.	Serial No.	Characteristics	Calibration Date	Calibration Due Date	Remark
Spectrum Analyzer	R&S	FSV40	101024	9kHz ~ 40GHz	Aug. 31, 2017	Aug. 30, 2018	Radiation (05CH01-CB)
Pre-Amplifier	WIRELESS	FPA-6592G	060027	0.1MHz~1.4GHz	Apr. 25, 2017	Apr. 24, 2018	Radiation (05CH01-CB)
Pre-Amplifier	EMCI	EMC012645SE	980341	1GHz ~ 26.5GHz	Dec. 06, 2017	Dec. 05, 2018	Radiation (05CH01-CB)
Pre-Amplifier	MITEQ	TTA1840-35-HG	1864479	18GHz ~ 40GHz	Jul. 10, 2017	Jul. 09, 2018	Radiation (05CH01-CB)
Bilog Antenna	Schaffner	CBL6112B & N-6-06	2894 & AT-N0608	30MHz ~ 1GHz	Feb. 07, 2017	Feb. 06, 2018	Radiation (05CH01-CB)
Horn Antenna	COM-POWER	AH-118	071028	1GHz ~ 18GHz	Jun. 14, 2017	Jun. 13, 2018	Radiation (05CH01CB)
Horn Antenna	Schwarzbeck	BBHA 9170	BBHA9170252	15GHz ~ 40GHz	Jul. 05, 2017	Jul. 04, 2018	Radiation (05CH01-CB)
CABLE	Marvelous	N/A	Low Cable-6	30MHz ~ 1GHz	Oct. 11, 2017	Oct. 10, 2018	Radiation (05CH01CB)
CABLE	Woken	N/A	High Cable-25+26	1GHz ~ 26.5GHz	Oct. 11, 2017	Oct. 10, 2018	Radiation (05CH01-CB)
RF Cable-high	Woken	High Cable-40G#1	N/A	18GHz ~ 40 GHz	Oct. 11, 2017	Oct. 10, 2018	Radiation (05CH01-CB)
RF Cable-high	Woken	High Cable-40G#2	N/A	18GHz ~ 40 GHz	Oct. 11, 2017	Oct. 10, 2018	Radiation (05CH01-CB)
Test Software	Audix	E3	5.04.1019f	N/A	N/A	N/A	Radiation (05CH01-CB)
Mixer	OML	M19HW/A	U91113-1	40 ~ 60 GHz	Oct. 12, 2017	Oct. 11, 2018	Radiation (05CH01-CB)
Mixer	OML	M15HW/A	V91113-1	50 ~ 75 GHz	Oct. 12, 2017	Oct. 11, 2018	Radiation (05CH01-CB)
Mixer	OML	M12HW/A	E91113-1	60 ~ 90 GHz	Oct. 12, 2017	Oct. 11, 2018	Radiation (05CH01-CB)
Mixer	OML	M08HW/A	F91113-1	90 ~ 140 GHz	Oct. 12, 2017	Oct. 11, 2018	Radiation (05CH01-CB)
Standard Horn Antenna	Custom Microwave	M19RH	U91113-A	40 ~ 60 GHz	N.C.R	N.C.R	Radiation (05CH01-CB)
Standard Horn Antenna	Custom Microwave	M15RH	V91113-A	50 ~ 75 GHz	N.C.R	N.C.R	Radiation (05CH01-CB)
Standard Horn Antenna	Custom Microwave	M12RH	E91113-A	60 ~ 90 GHz	N.C.R	N.C.R	Radiation (05CH01-CB)
Standard Horn Antenna	Custom Microwave	M08RH	F91113-A	90 ~ 140 GHz	N.C.R	N.C.R	Radiation (05CH01-CB)

Instrument	Manufacturer	Model No.	Serial No.	Characteristics	Calibration Date	Calibration Due Date	Remark
Temp. and Humidity Chamber	Gaint Force	GTH-408-40-CP-AR	MAA1410-011	-40~100 degree	Sep. 15, 2017	Sep. 14, 2018	Conducted (TH01-CB)

Note: Calibration Interval of instruments listed above is one year.

6 Measurement Uncertainty

Test Items	Uncertainty	Remark
Conducted Emission	1.7 dB	Confidence levels of 95%
Radiated Emission (30MHz ~ 1,000MHz)	3.6 dB	Confidence levels of 95%
Radiated Emission (1GHz ~ 18GHz)	3.7 dB	Confidence levels of 95%
Radiated Emission (18GHz ~ 40GHz)	3.5 dB	Confidence levels of 95%
Radiated Emission (40GHz ~ 220GHz)	4.7 dB	Confidence levels of 95%

Appendix A. Test Photos

1. Photographs of Test Configuration

FRONT VIEW

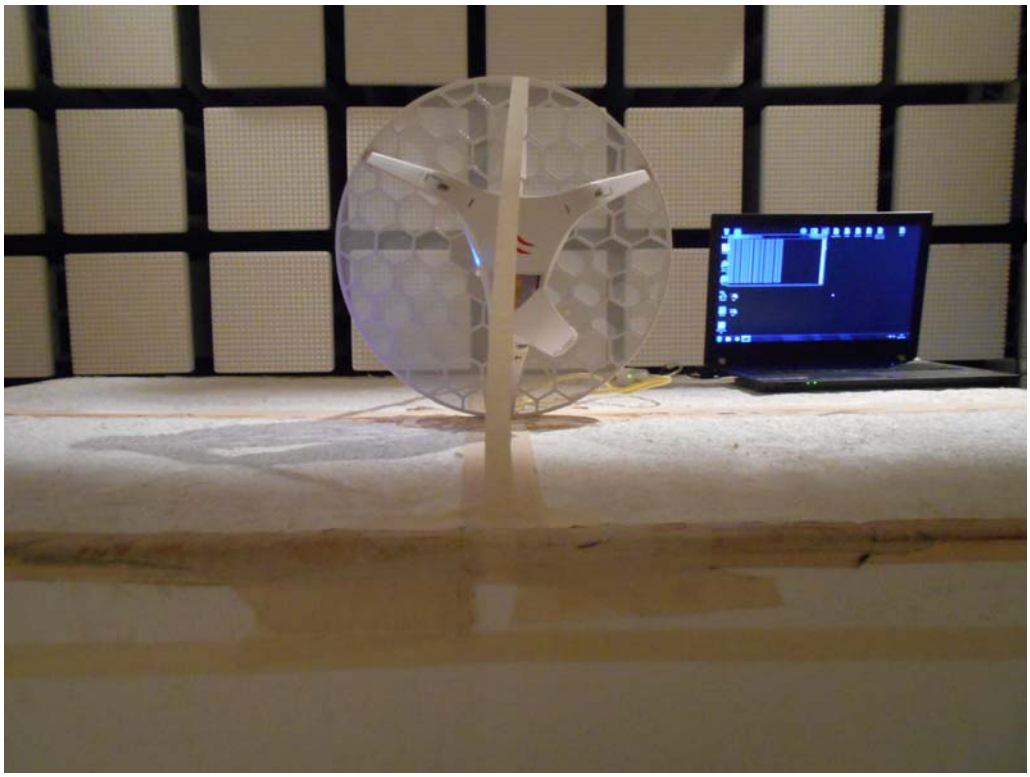
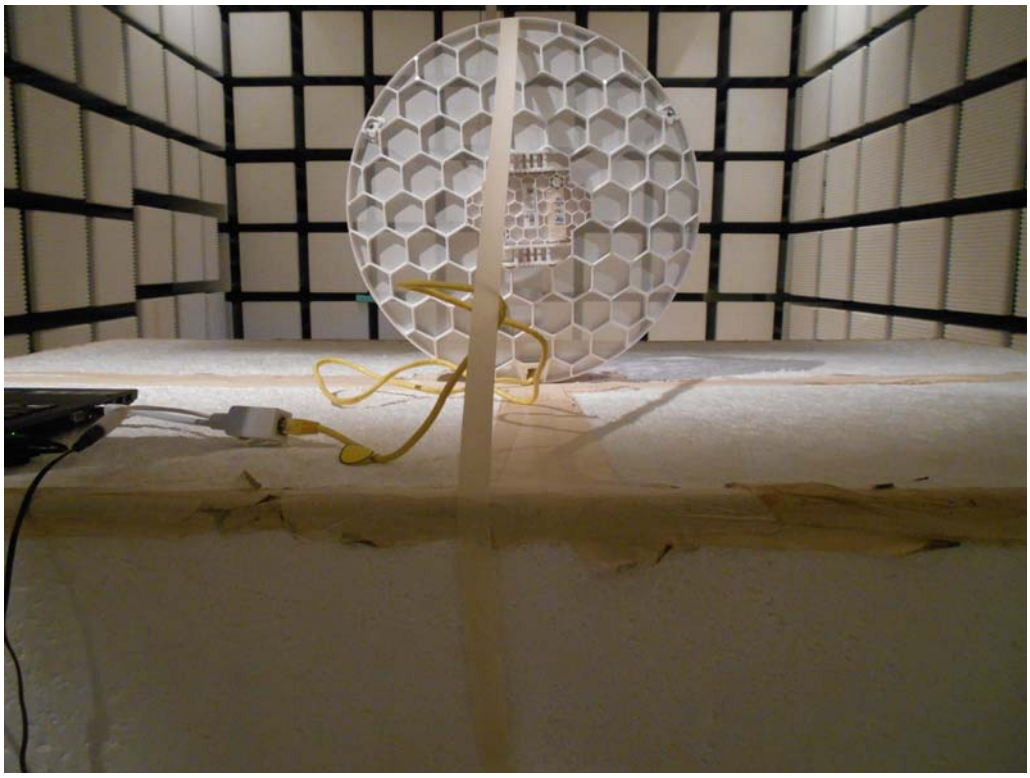
REAR VIEW